REVISIONS				
ZONE	REV.	DESCRIPTION	DATE	APPROVED
	–	ORIGINAL RELEASE JOB# 408180	8/23/04	

DESCRIPTION

AMC MODEL SWN–1140–3DT–STANDARD OPTION: 812, PLUS15V, MINUS15V IS A SINGLE POLE THREE THROW ABSORPTIVE/NON–REFLECTIVE SWITCH DESIGNED TO OPERATE BETWEEN THE 8 TO 12 GHz FREQUENCY RANGE WITH AN INSERTION LOSS OF 3.0dB MAXIMUM, AN ISOLATION OF 60dB MINIMUM AND A VSWR OF 2.0:1.

SPECIFICATIONS

- FREQUENCY RANGE: ..... 8 TO 12 GHz
- INSERTION LOSS: ..... 3.0 dB MAXIMUM
- ISOLATION: ..... 60 dB MINIMUM
- VSWR: 2.0:1
- RISE TIME: 70dB
- FALL TIME: ..... 10 nSec TYPICAL, 15 nSec MAXIMUM
- DELAY ON: ..... 10 nSec TYPICAL, 15 nSec MAXIMUM
- DELAY OFF: ..... 75 nSec TYPICAL, 100 nSec MAXIMUM
- POWER INPUT: ..... 75 nSec TYPICAL, 100 nSec MAXIMUM
- SURVIVAL POWER: ..... (CW)+20 dBm (STANDARD), +10 dBm (HIGH SPEED)
- CONTROL: ..... 1 WATT CW, 10 WATTS PEAK 1 uSec
- POWER SUPPLY: ..... +15V @ 150 mA MAXIMUM
  −15V @ 100 mA MAXIMUM

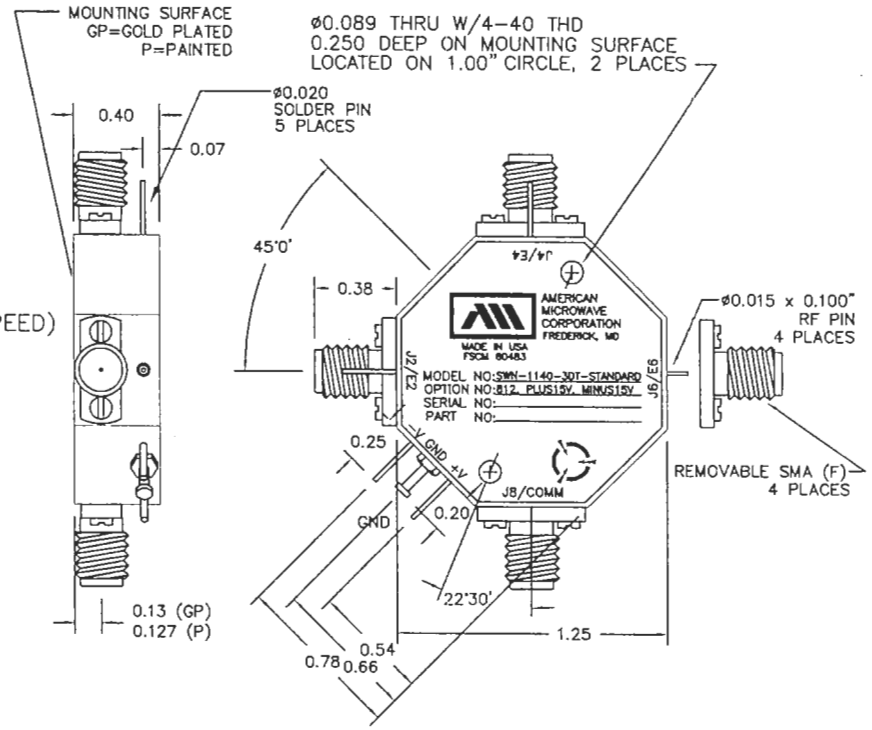

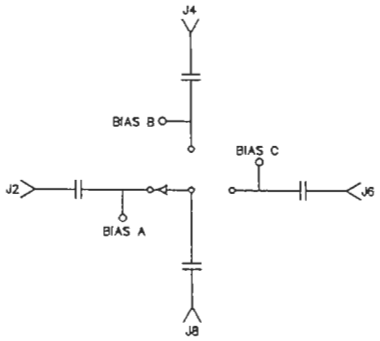

ENVIRONMENTAL RATINGS

- **TEMPERATURE:** ..... −20°C TO +70°C (OPERATING)
  −40°C TO +85°C (STORAGE)
- **HUMIDITY:** ..... MIL–STD–202F, METHOD 103B COND. B
- **SHOCK:** ..... MIL–STD–202F, METHOD 213B COND. B
- **VIBRATION:** ..... MIL–STD–202F, METHOD 204D COND. B
- **ALTITUDE:** ..... MIL–STD–202F, METHOD 105C COND. B
- **TEMPERATURE CYCLE:** ..... MIL–STD–202F, METHOD 107D COND. A

NOTE: SPECIFICATIONS WILL VARY OVER OPERATING TEMPERATURE
NOTE: THE ABOVE SPECIFICATIONS ARE SUBJECT TO CHANGE OR REVISION

ALL DIMENSIONS ARE IN INCHES
TOLERANCES:
X.XX ±0.020
X.XXX ±0.010

AMERICAN MICROWAVE CORPORATION
7311-G GROVE ROAD
FREDERICK, MARYLAND 21704 USA
TEL: 301-662-4700 FAX: 301-662-4938
WEBSITE: www.americanmicrowavecorp.com
E-MAIL: sales@americanmicrowavecorp.com
ISO 9001:2000 CERTIFIED

APPROVALS	DATE
DRAWN JDT	8/23/04
CHECKED	8/25/04
ISSUED	

TITLE
PRODUCT FEATURE
SWN–1140–3DT–STANDARD
OPTION: 812, PLUS15V, MINUS15V
8 TO 12 GHz, SINGLE POLE THREE THROW ABSORPTIVE SWITCH

SIZE	FSCM NO.	DWG NO.	REV.
A	60483	100–7099	–

SCALE N:S SHEET 1 OF 3